ARC SYSTEMS INC.

ISO 9001:2008 Certified

Over 4 Decades of Experience in Custom Precision Motion Control

www.arcsystemsinc.com

ARC Systems, Inc. has manufactured Electric Motors and Motor Parts for over 4 decades. Our 12,000 Square Foot, rectangular, concrete block industrial building, is located 45 miles east of New York City and ¼ mile from Interstate 495.

ALL PRODUCTS MADE IN
U.S.A

ARC Systems, Inc. is a Registered - Certified ISO 9001:2008 Manufacturer

ISO 9001:2008
REGISTERED FIRM
Certificate no. US1978

ARC SYSTEMS INC.

ISO 9001
REGISTERED FIRM

Registration Certificate

This document certifies that the administration systems of

Arc Systems Inc.

2090 Joshuas Path, Hauppauge, NY 11788-4764

have been assessed and approved by QAS International
to the following management systems, standards and guidelines:

ISO 9001:2008

The approved administration systems apply to the following:

Design, development, manufacture, supply
and repair of specialty motors and components.

Original Approval 12th August 2003
Current Certificate 12th August 2009
Certificate Expiry 12th August 2010
Certificate Number A1978US

On behalf of QAS International

www.qas-international.com

This certificate remains valid while the holder maintains their quality administration systems in accordance with the standards and guidelines stated above, which will be audited annually by QAS International. The holder is entitled to display the above registration mark for the duration of this certificate. This certificate must be returned to QAS International on reasonable request.

Issuing Office: QAS Boston, 25 Burlington Mall Road, Suite 300, Burlington, MA 01803, USA

ARC Systems, Inc. was founded in 1967 to provide the aerospace industry with a dependable source for high-precision motors and AC components. To meet the needs of this demanding market, ARC developed a unique team philosophy to be a fully integrated, completely self-sufficient facility.

ARC Systems, Inc. has over 40 years of experience in customized manufacturing for the following industries:

- Process Control Equipment
- Power Plant Instrumentation
- Telecommunications
- Geological Instrumentation
- Food Industry
- Aircraft Instrumentation
- Helicopter Navigation
- Marine Equipment
- Medical Equipment
- Paper Industry

Products Made By ARC Systems, Inc.

PRODUCT	CUSTOMER	APPLICATION
Tachometers (46-01)	Diehl	Bell Helicopter
Rotor/Stator Sets	Goodrich	Thrust Reverser Motor 737
Rotor/Stator Sets	GE	Trim Tab Motor 777
Servo Motor (15-65-101)	Sperry Marine	Mark 7 Compass
Small Induction Motors (10-20-137)	AeroControlex	Valve Motor in After Burner F-18
Size 8 Servo Motor (65-04)	Parker	Fuel System on Many Military and Commercial Aircraft
Size 5 Gyro Stator	US Government	Military Aircraft
Size 8 Motor Generator	Fed-X	Flight Training Equipment
Size 11 RVDT	Measurement Specialties	Bradley Fighting Machine
Size 11 Servo	Parker	F15 and F16 Fuel System
BLDC Motor	ITT	Moving Antenna System B-2
Synchronous Motor	Kollsman Instrument	Cobra Helicopter
BLDC Motor	Lear Romec	Water System for Private Jets
Shaft Rotor Assembly	Jet Parts Engineering	Jet Starter Motor
BLDC Motor with Resolver	Parker CSD	Falcon
BLDC Motor with Brake	Parker CSD	RATTLRS Missile
Induction Motor with Gear Head	Lockheed Martin	TPS-59
Induction Motor with Brake	Breeze Eastern	H92 Helicopter
BLDC Motor with Brake	Breeze Eastern	Airbus A400
Induction Motor	Senior Aerospace	Boeing Series 7 Planes
Induction Motor	Monogram/Zodiac	Waste/Gas Removal System
Size 10 Servo Motor with Brake	Thomas Instrument	Air Force Maintenance

ARC Systems, Inc. sails on Every Ship in the Fleet

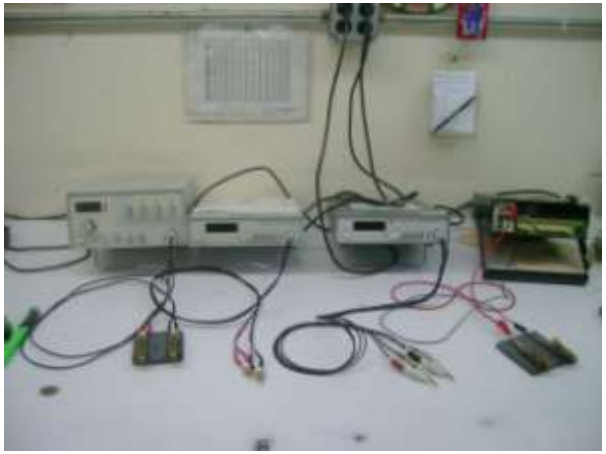

Quality Control:

Quality is literally built into the product at ARC. Attention to quality is monitored through all phases of the operation. From receiving through manufacturing, ARC's overall quality assurance program is certified to ISO 9001:2008.

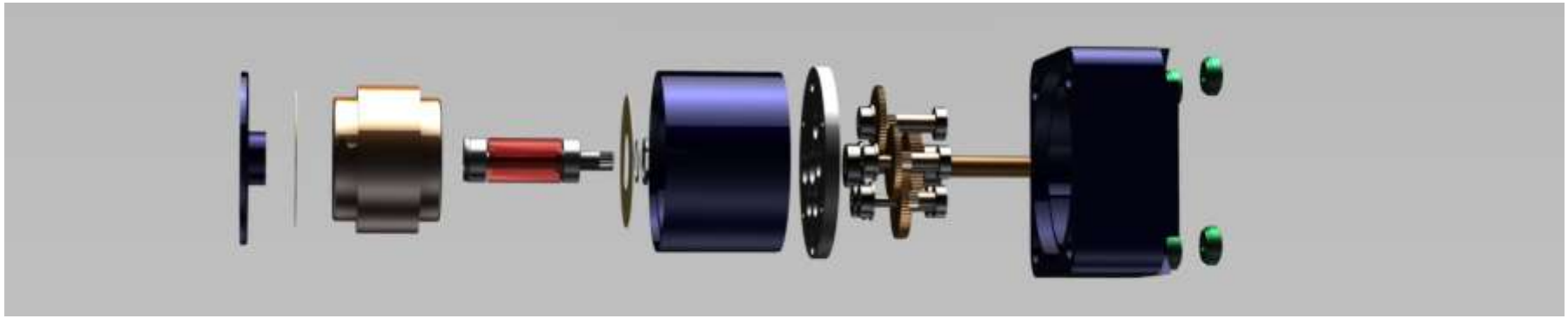

Engineering:

Our engineers interact continuously with our customers from concept through manufacturing. We support our capabilities with state-of-the-art Computer Aided Design (CAD) system, Autodesk Inventor, and a proprietary magnetic design program specifically developed at ARC Systems.

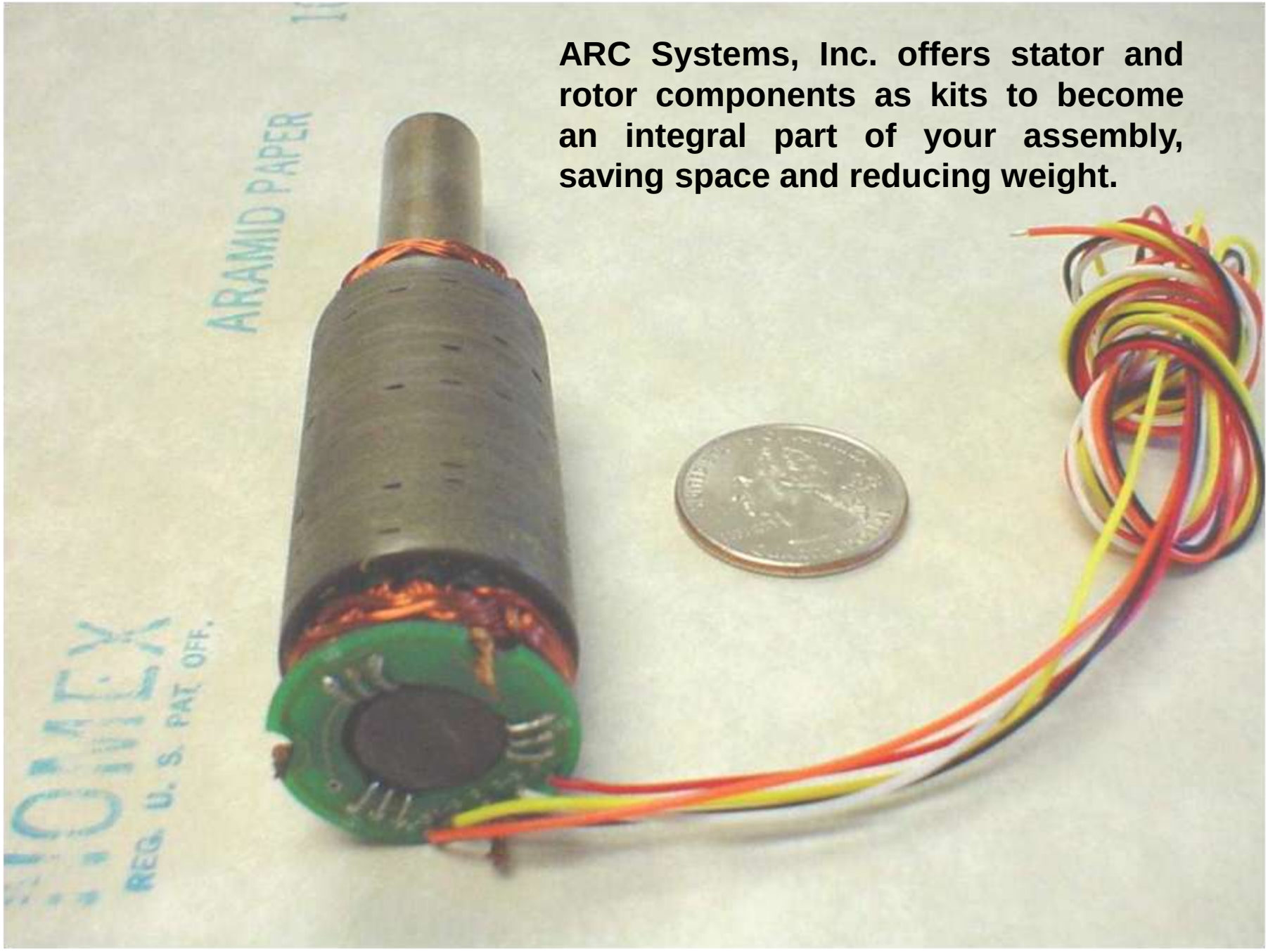

ARC Systems, Inc. offers stator and rotor components as kits to become an integral part of your assembly, saving space and reducing weight.

ARC Systems, Inc. experience in customized precision winding manufacturing is peerless.

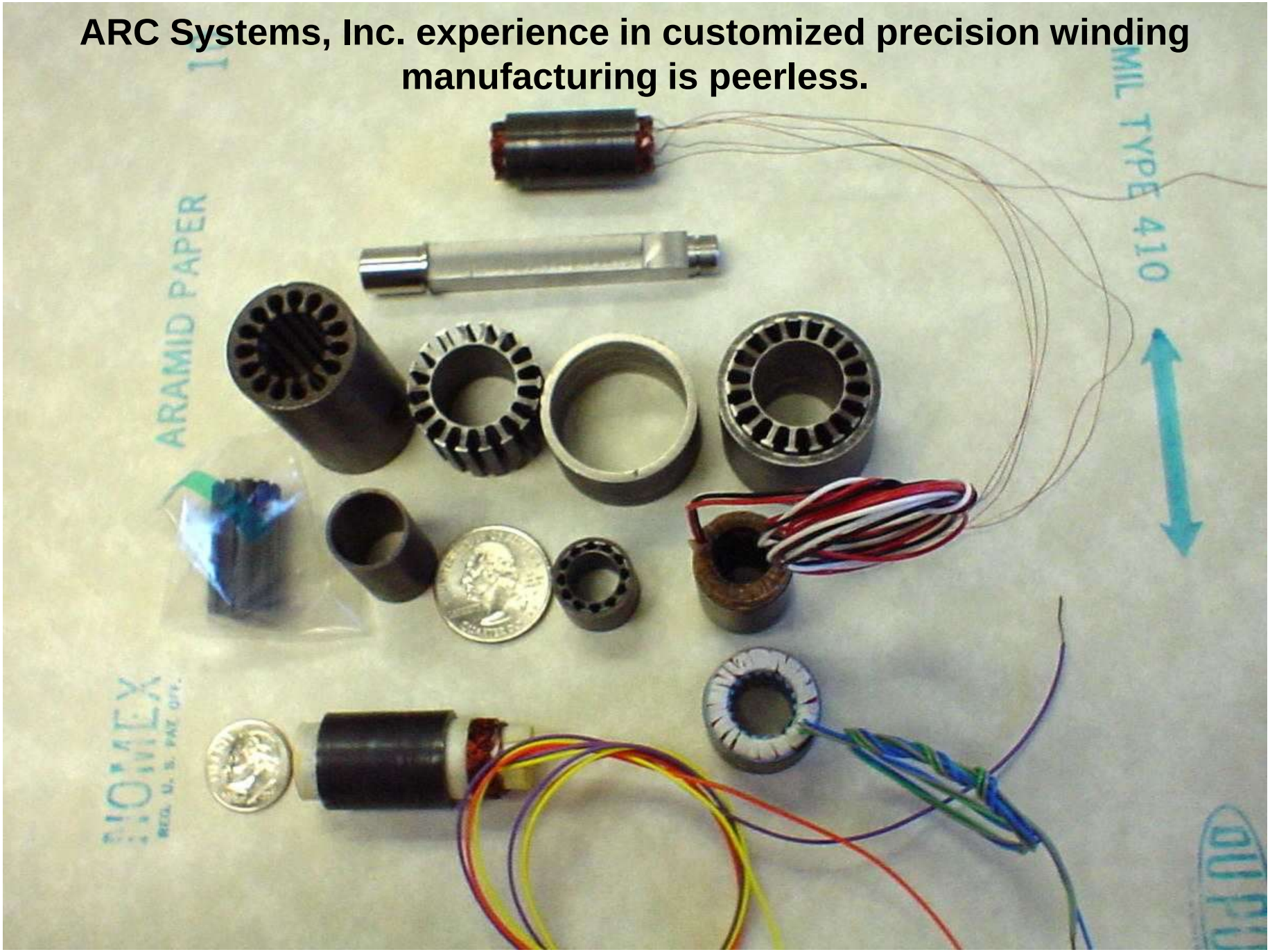

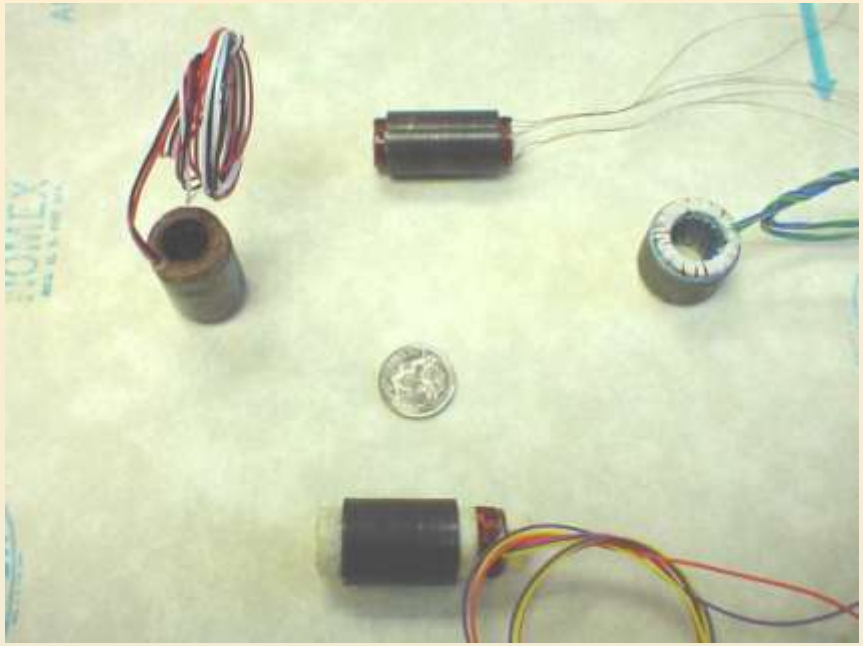

All laminations are stacked utilizing designed stacking tools and fixtures. ARC Systems, Inc. is truly one of the few remaining, totally integrated, suppliers of specialty custom windings in the electromechanical motor and components industries. Our in-house machining capabilities enable us to grind/hone stacks to .0002" tolerances on both Outer Diameter and Inner Diameter. If the application demands, closer tolerances can be achieved.

ARC’s ability to wind and insert applications where the quantities are not large enough for automatic assembly lines distinguishes us from other companies.

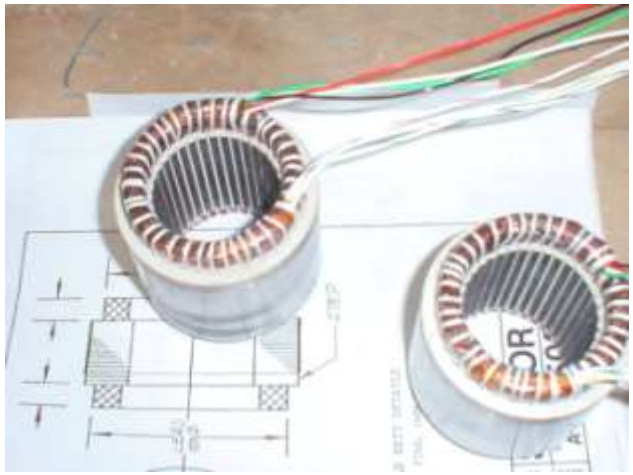

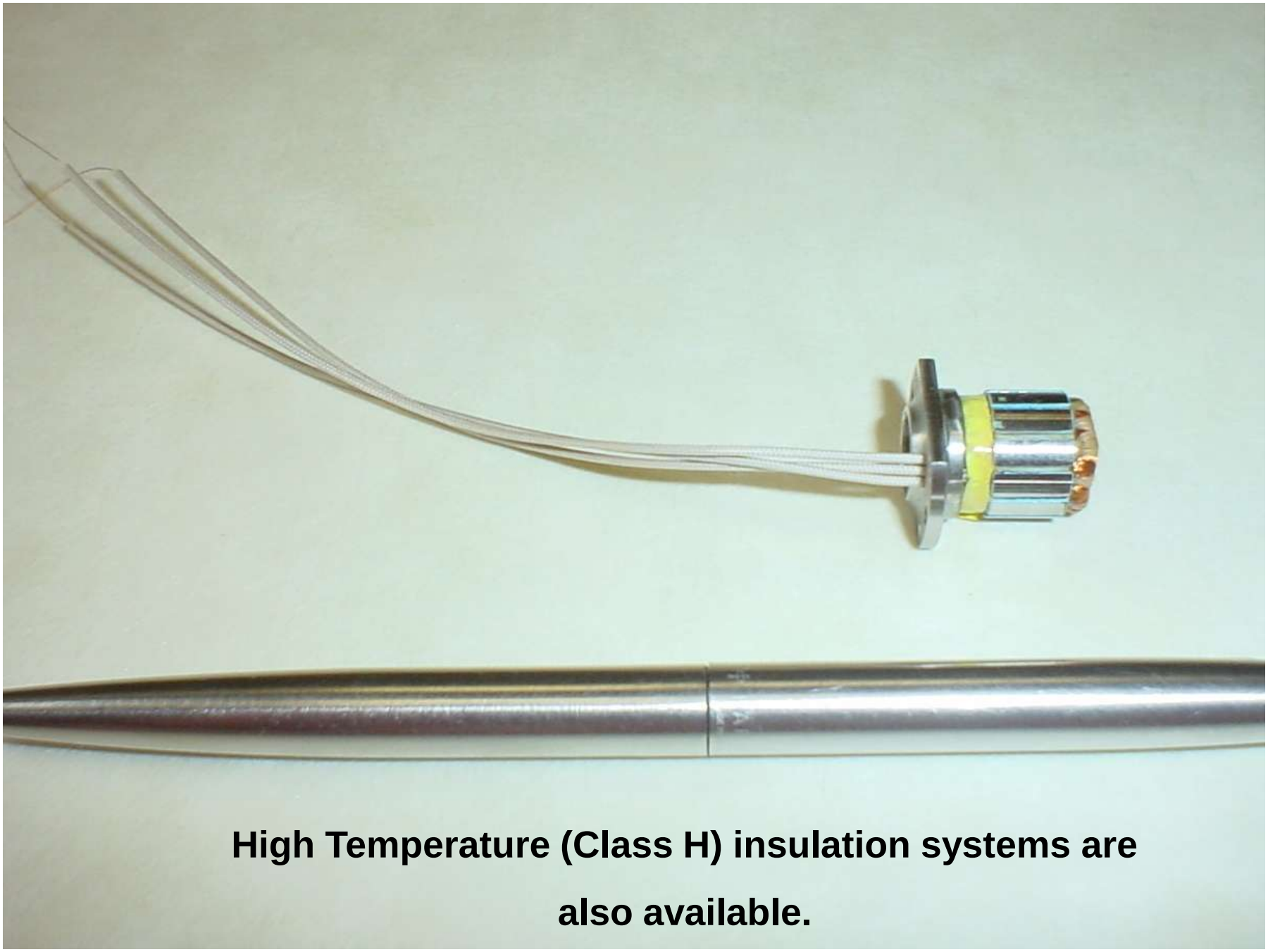

High Temperature (Class H) insulation systems are also available.

Capabilities

- ♦ Potting
- ♦ Vacuum Impregnation
- ♦ Grinding
- ♦ Honing
- ♦ MIL-STD-2000 Soldering

Magnet Wire

- Copper
- Solderable
- Polyester-Imide
- Polyester-Amide-Imide
- Polyimide

Winding Types

- Skein Wound – Hand Inserted
- Symmetrical Insertion
- Wave Insertion
- Lap Winding
- Concentric Winding

ARC Systems, Inc. is truly one of the few remaining, totally integrated, suppliers of specialty custom windings in the electromechanical motor and components industries.

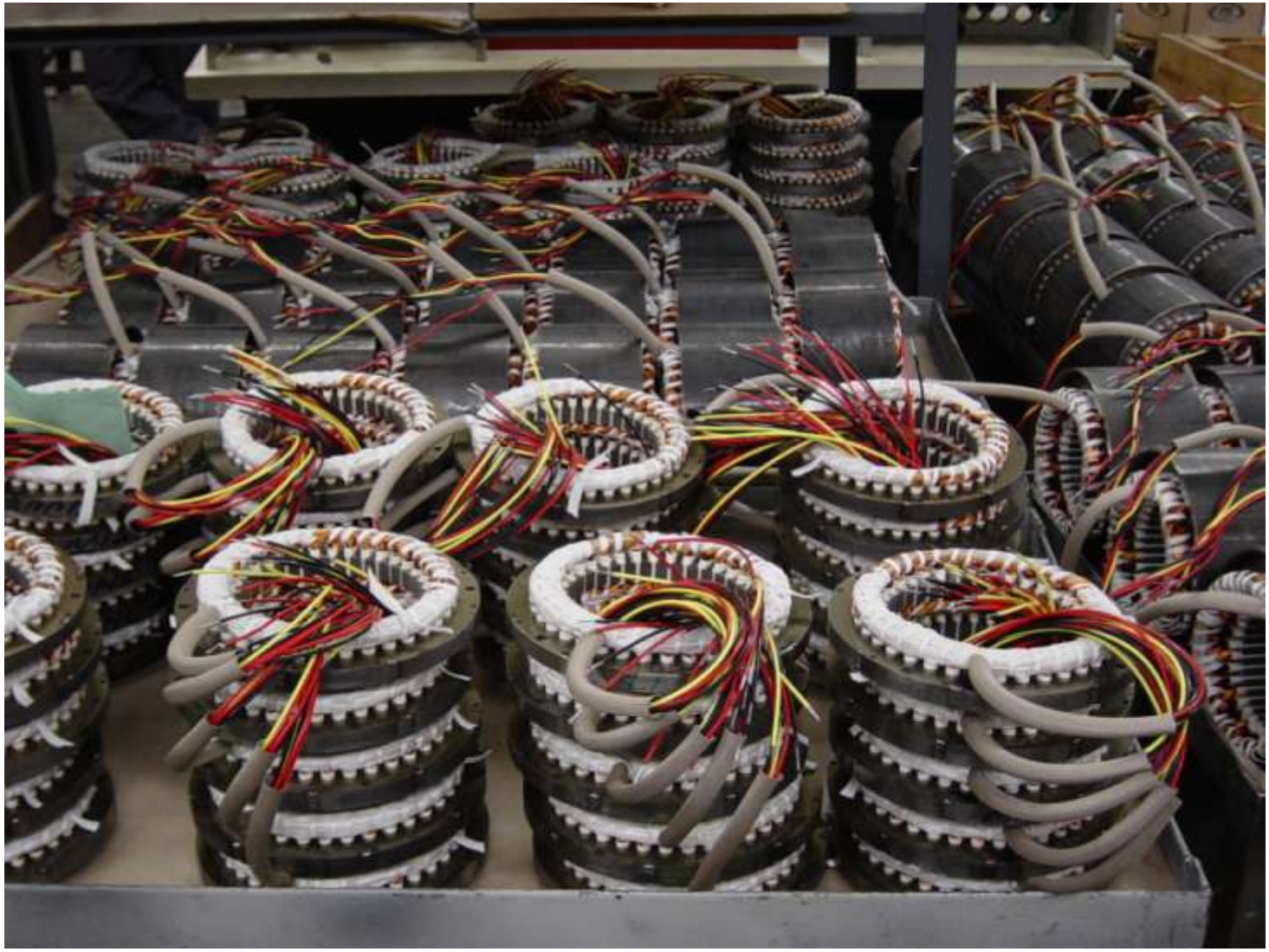

ARC's complete lines of AC Induction Motors are manufactured using a squirrel cage rotors utilizing both aluminum and copper bars.

Different Rotor Bar Materials can be utilized for special performance requirements.

Speed and torque can be tailored to individual requirements by changing the conductivity of the rotor bars.

To meet the needs of this demanding market, ARC has become a fully integrated, completely self-sufficient facility.

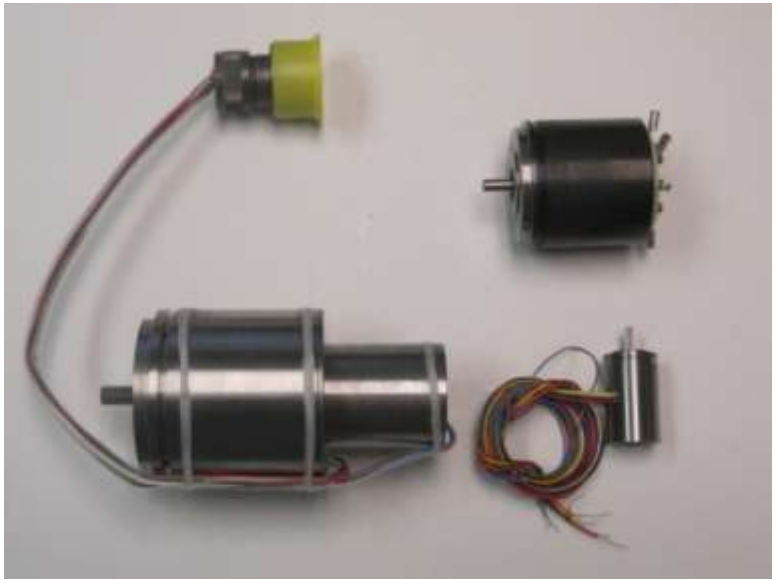

Every Year ARC Systems, Inc. supplies thousands of motor products for the military, commercial, and aerospace industries.

ARC Systems, Inc. has been producing

QUALITY

freight elevator motors **since 1967**.

ARC has been Private Labeling for one of the leading freight door manufacturers for more than 30 years

PART NUMBER	DESCRIPTION
25172	High Torque Gate Motor
25182	Low Torque Gate Motor
033049	110 Volt Cam Motor
033050	Cam Motor
052820	Small Door Motor
056910	High Torque Door Motor
056921	Low Torque Door Motor
057320	Special Door Motor (SM-900 RPM 8T)
057330	Special Door Motor (SM-450 RPM)
058720	Small Door Motor (900 RPM)
058730	Small Door Motor (450 RPM)
233052	Cam Motor Double Torque

Why buy re-wound/re-furbished stators/motors when you can
buy NEW MOTORS, for less then re-winding,
from the OEM that has been supplying and
Private Labeling for one of the leading freight door manufacturers
for more than 30 years.
Avoid paying as much as 3X mark-up. Go Direct!

Below is just a few of the motors we make:

CAM Motor 110 V
CAM Motor 220 V
CAM Motor 220 V M.R.
GATE Motor Low Torque
GATE Motor High Torque
GATE Motor Low Torque M.R.
GATE Motor High Torque M.R.
GATE Motor Low Torque E.R.
GATE Motor High Torque E.R.
DOOR Motor Low Torque
DOOR Motor High Torque
DOOR Motor Low Torque M.R.
DOOR Motor High Torque M.R.
DOOR Motor Low Torque E.R.
DOOR Motor High Torque E.R.
6.5” Diameter 900 RPM Motor
6.5” Diameter 450 RPM Motor
4-Tooth Door Motor Pinion Gear
8-Tooth Gate Motor Pinion Gear

We have motors on the shelf for immediate delivery.

CALL FOR OUR PRICE LIST

(M.R.=Moisture Resistant and
E.R.=Explosion Resistant)
Please feel free to contact us for more information

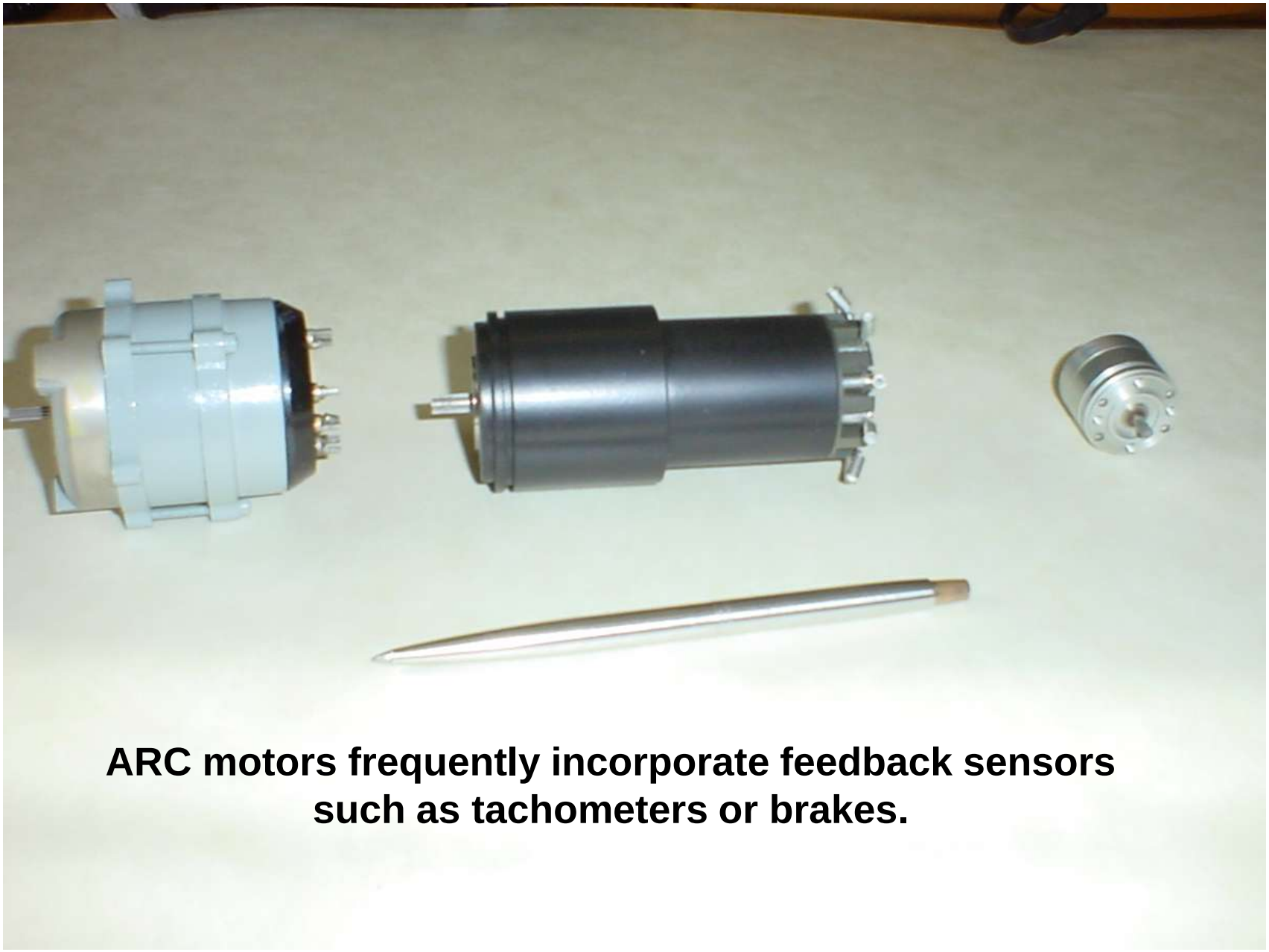

ARC motors frequently incorporate feedback sensors such as tachometers or brakes.

Along with our unique manufacturing processes, our internal capabilities provide low cost solutions for our customers. Build to print or custom windings are ARC's specialty.

ARC has a vast library of proven designs along with a broad base of frame sizes and configurations for each product line.

ARC Systems, Inc. is committed to being the absolute best and most comprehensive source for Motion Control Components.

The induction motor is the most commonly used type of AC motor. Its simple, rugged construction costs relatively little to manufacture.

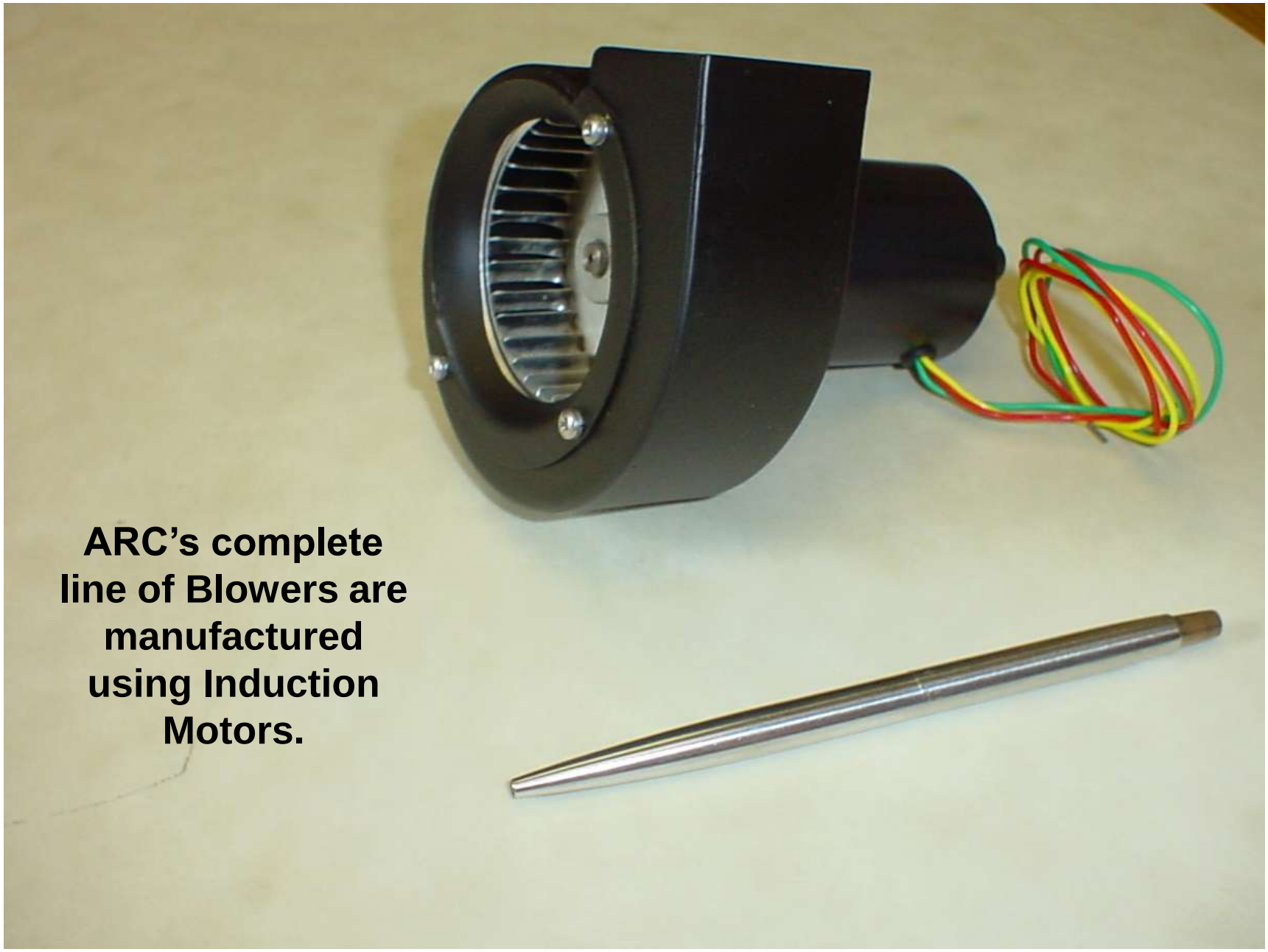

ARC's complete line of Blowers are manufactured using Induction Motors.

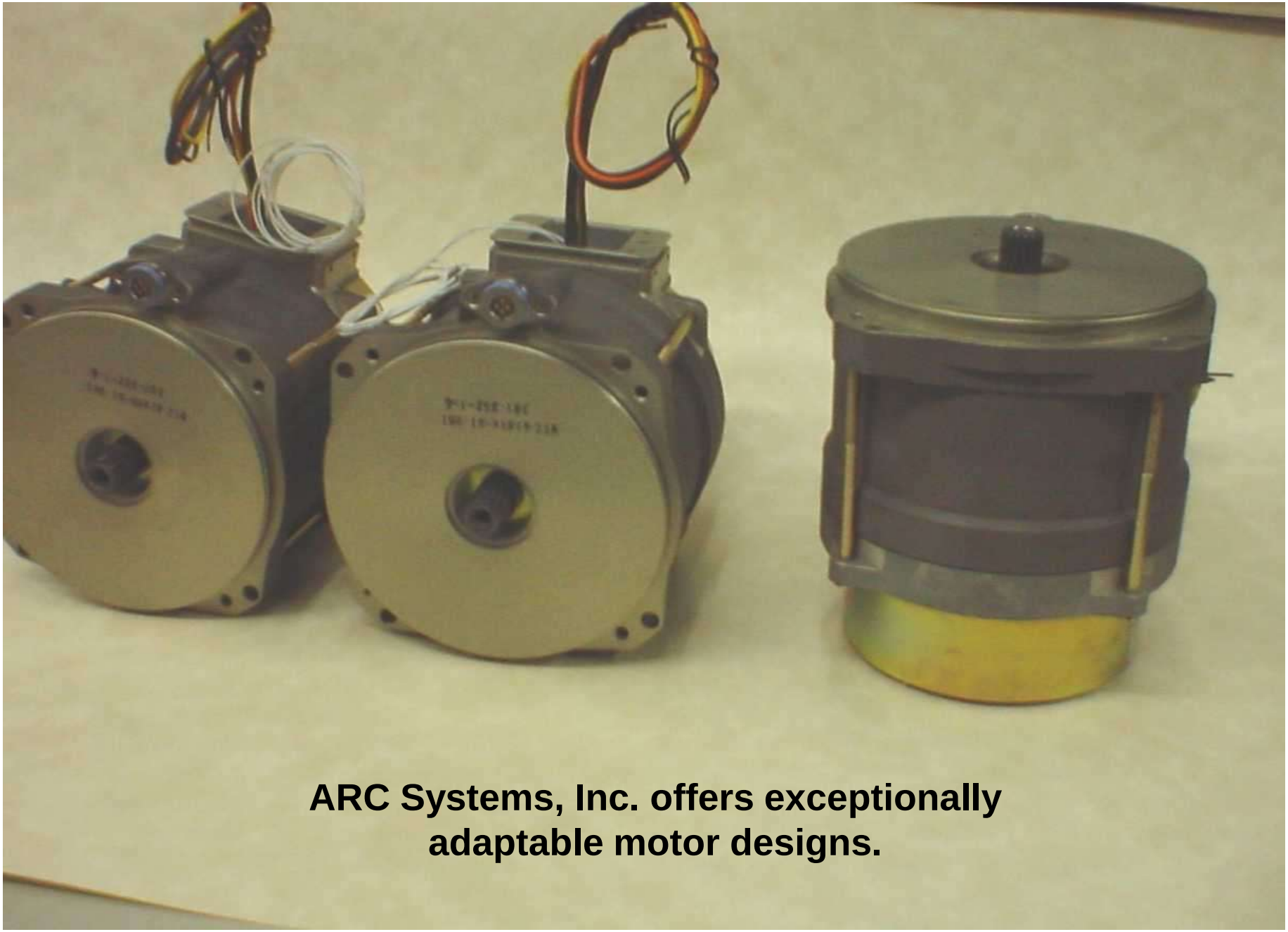

ARC Systems, Inc. offers exceptionally adaptable motor designs.

From concept through engineering and production, ARC is committed to producing the highest quality components at competitive prices, delivered on time.

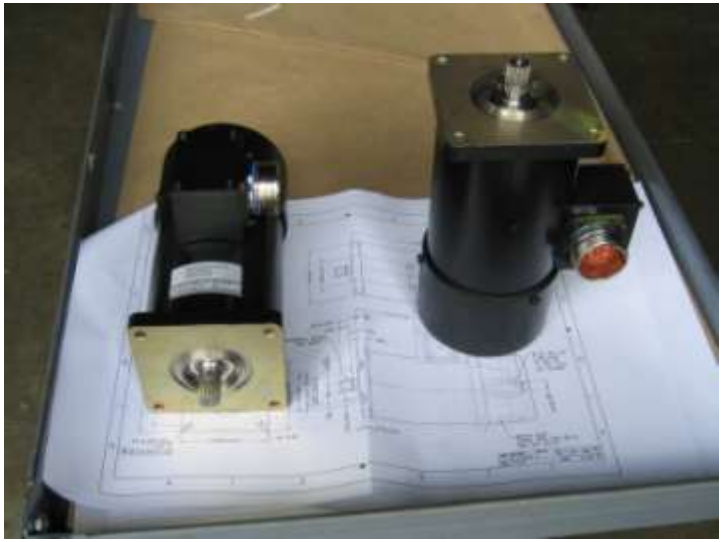

Gear heads can be combined with any component for high-torque actuation systems.

Actuators from ARC Systems, Inc. are robust and reliable devices with long lives under tough industrial conditions.

Our engineers interact continuously with our customers from concept through manufacturing. We support our capabilities with a state-of-the-art Computer Aided Design (CAD) system and a proprietary magnetic design program specifically developed at ARC Systems.

Our basic package includes the in-line arrangement of motors, tachometers, gear heads, and brakes. ARC can also supply complete electromechanical actuation systems, with or without electronic control.

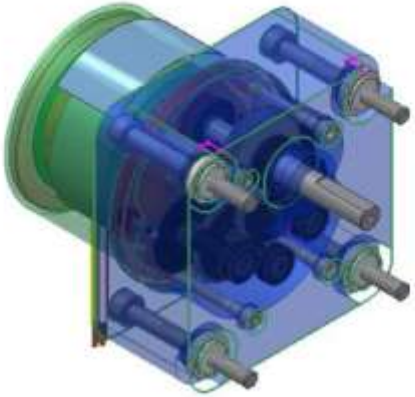

Various applications require unique configurations for output shafts, mounting flanges, housing and electronics packaging.

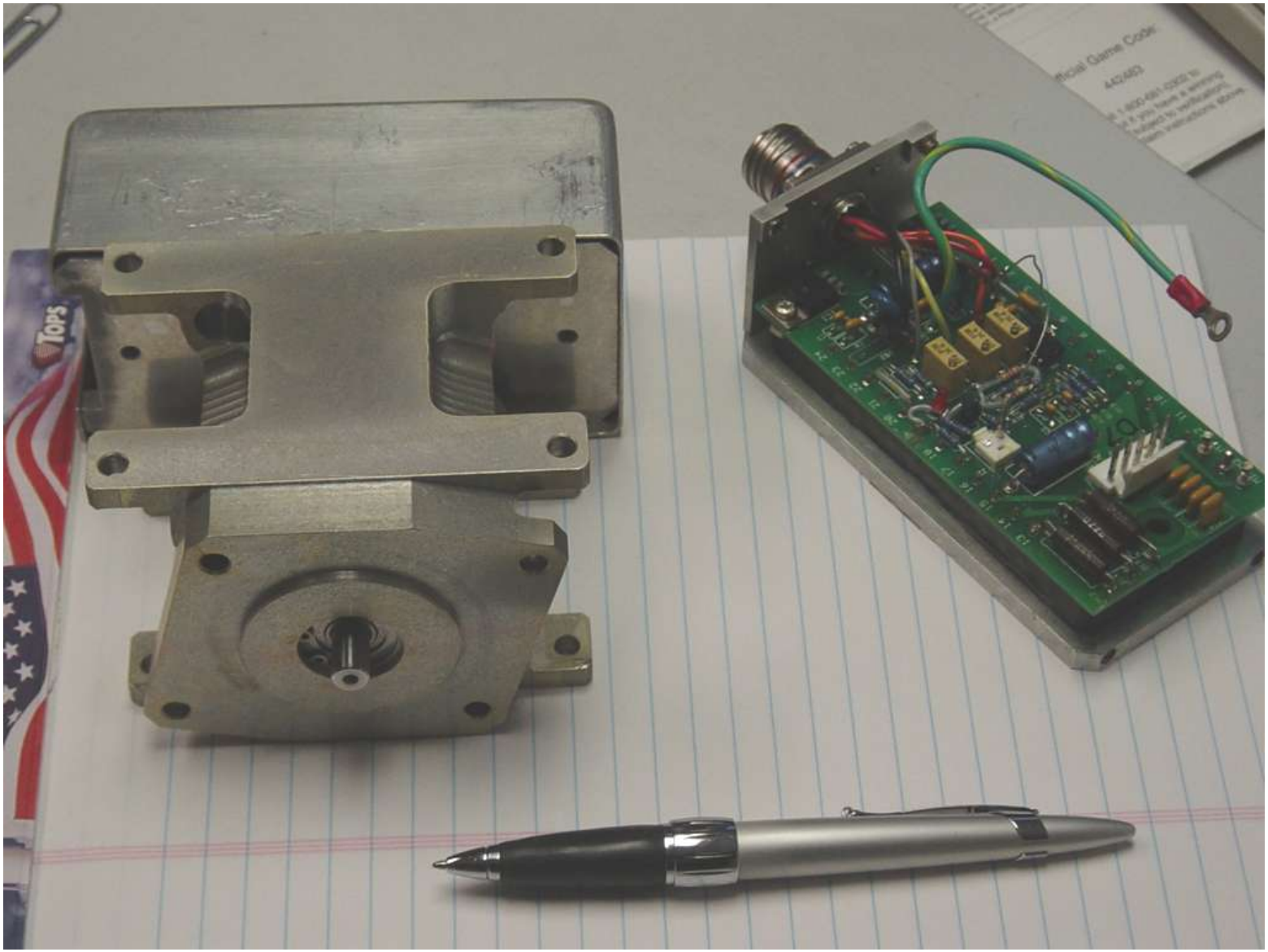

Our internal capabilities, such as vacuum impregnation, precision bonding of aerospace laminations, multi-helix angle skewing capabilities, and powder coating, provide low cost solutions for our customers.

Machining:

Our automatic machining operation allows us to produce complex, high precision components in all materials. Utilizing these computer-driven devices, we are capable of close tolerance manufacturing.

Environmental/Temperature Testing available upon request.

ARC’s complete line of Fan Motors are manufactured using Induction Motors.

The induction motor derives its name from the fact that AC voltages are induced in the rotor circuit by the rotating magnetic field of the stator.

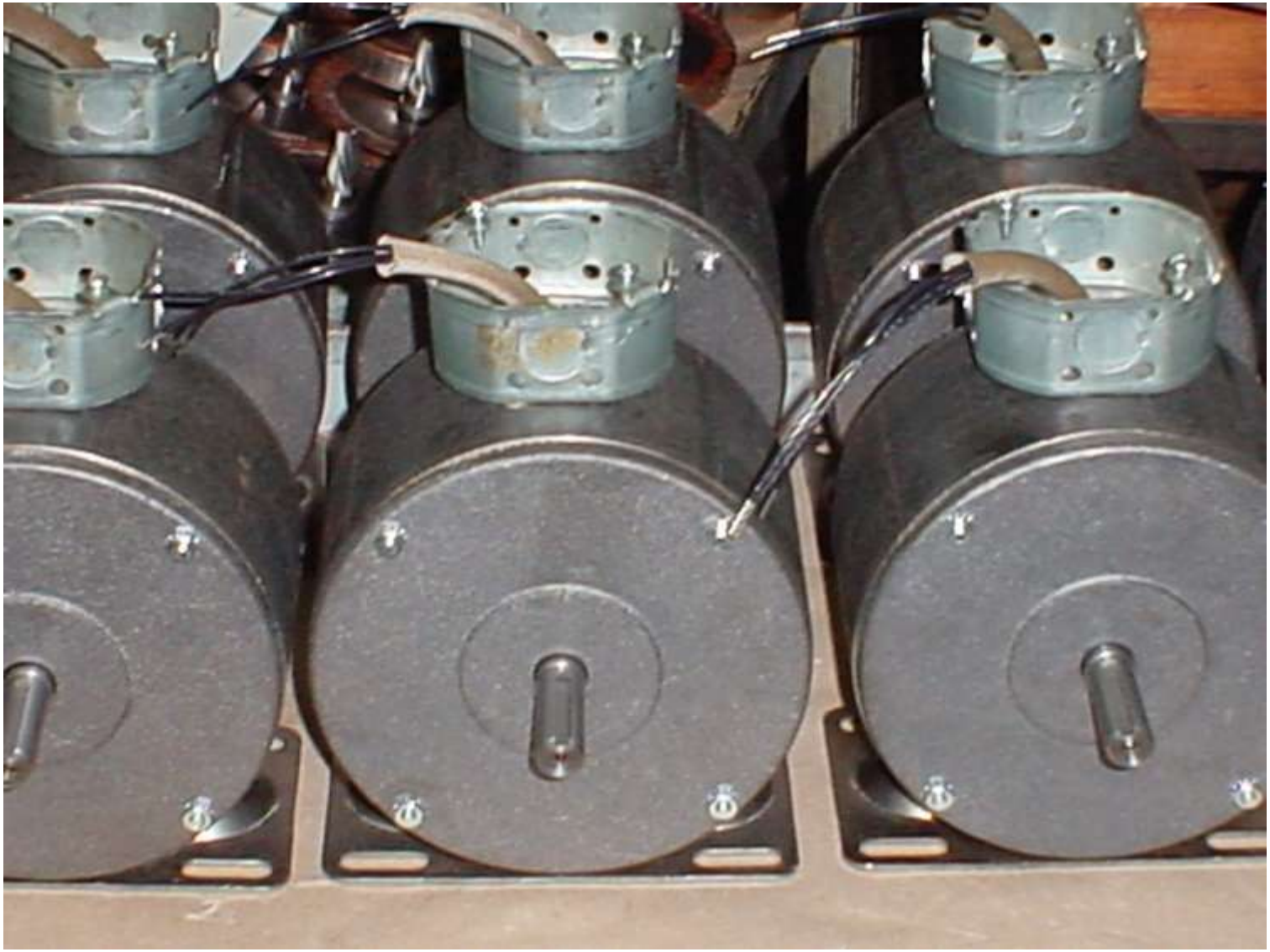

Our engineering and manufacturing experiences enable us to respond quickly and reliably to any design specification.

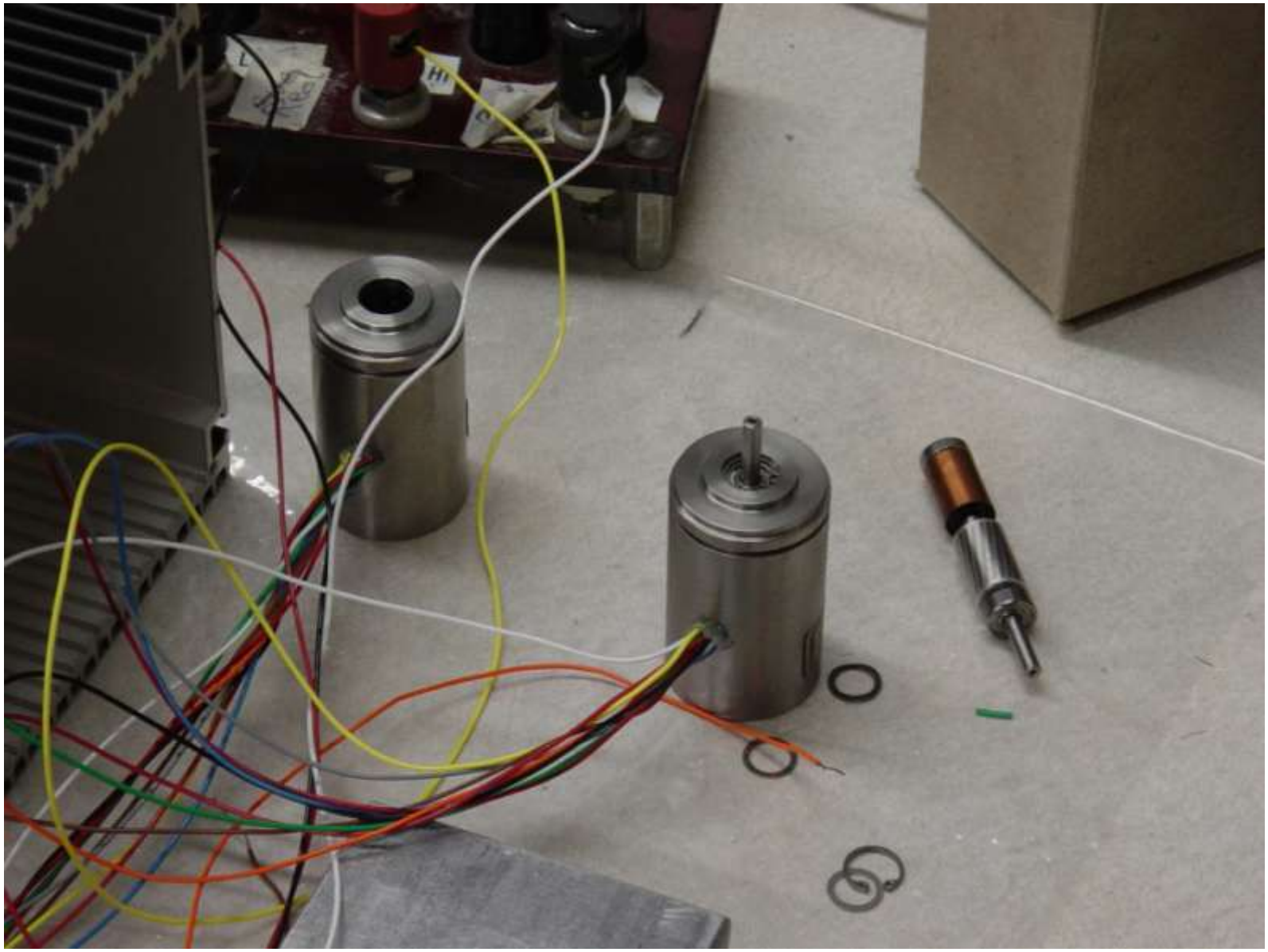

We can provide equipment built to existing drawings or by working concurrently with your engineers, we can provide custom design products to your specification. Let us be your contract manufacturer for aerospace actuators, assemblies, and motion control components.

Build to print offers our customers assembled, fully tested, and ready-to-install precision mechanical and electromechanical assemblies.

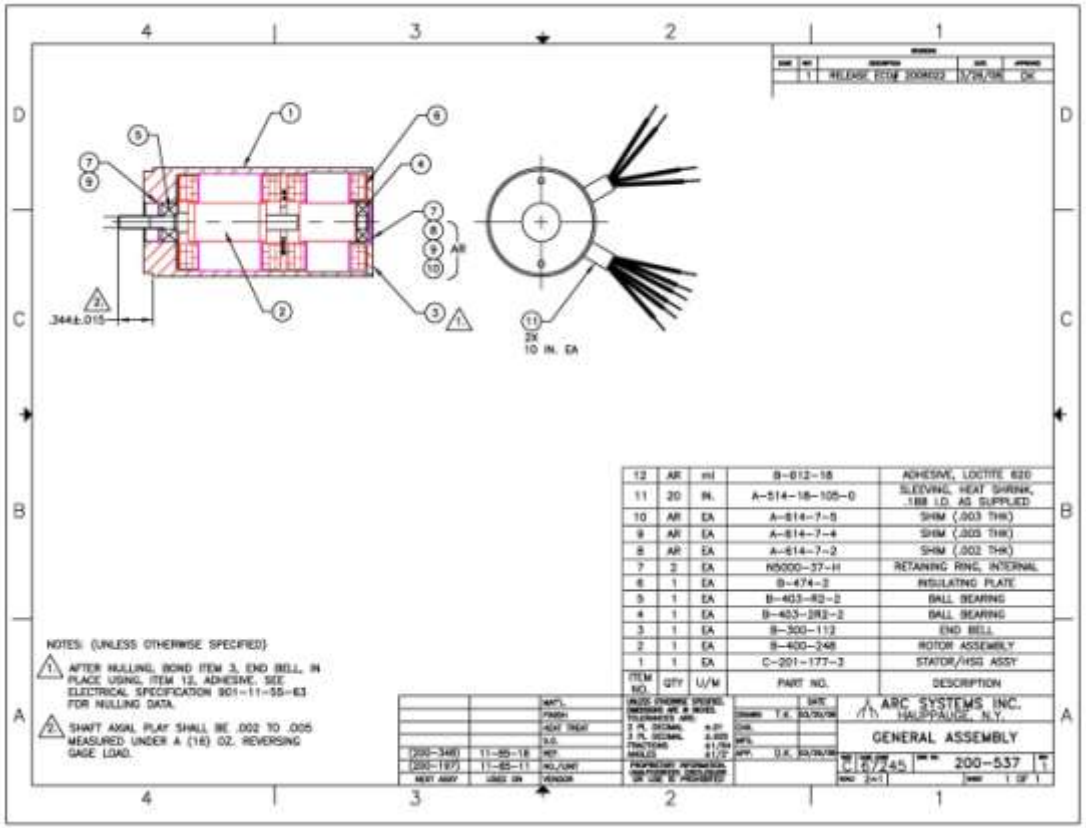

ARC Systems, Inc. provides excellent customer service by designing, manufacturing, and shipping the products ourselves, rather than relying on a distributor.

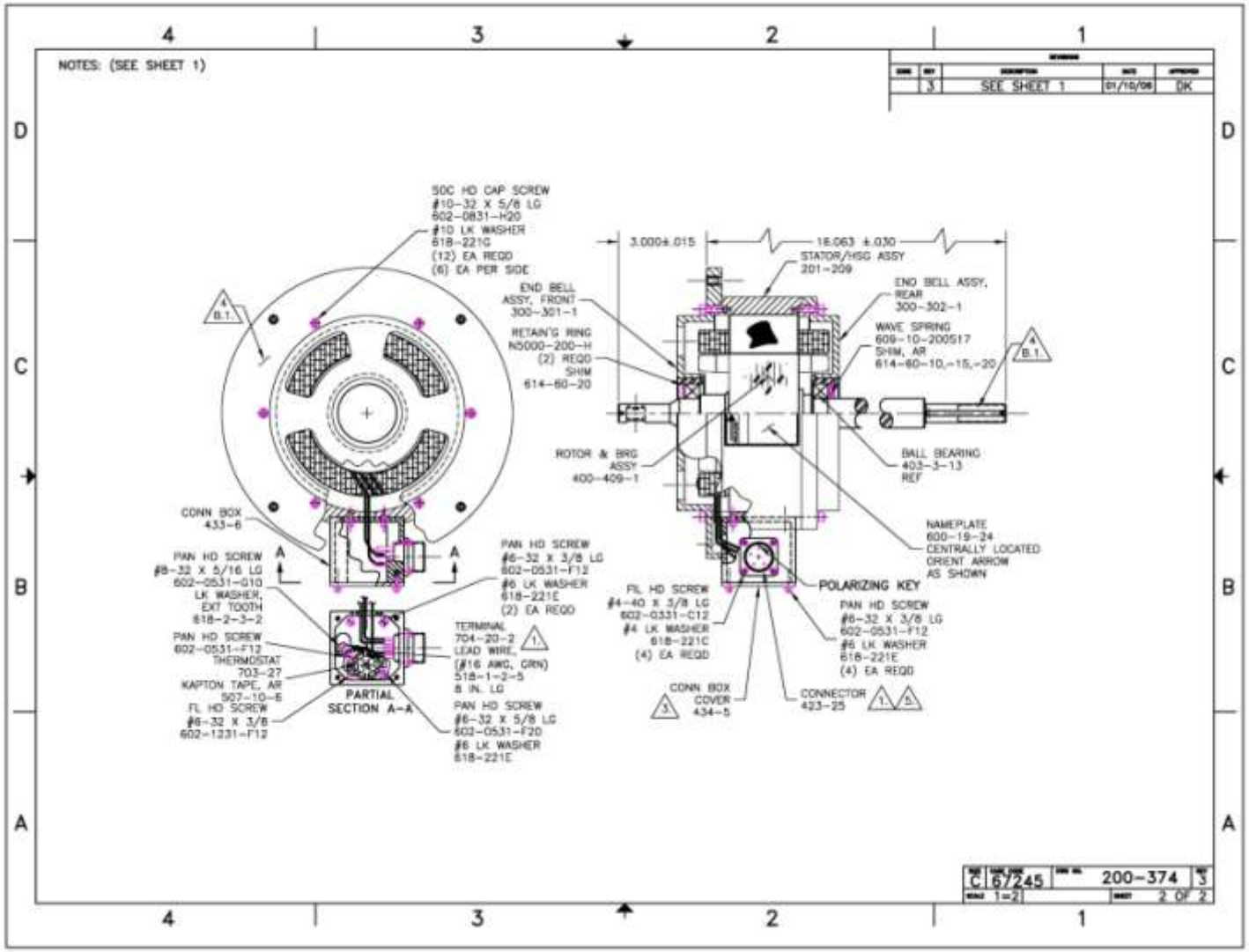

ARC Systems, Inc. offers exceptionally adaptable designs. Our standard line is from 0.75" diameter (size 8) to 2.25" diameter (size 23).

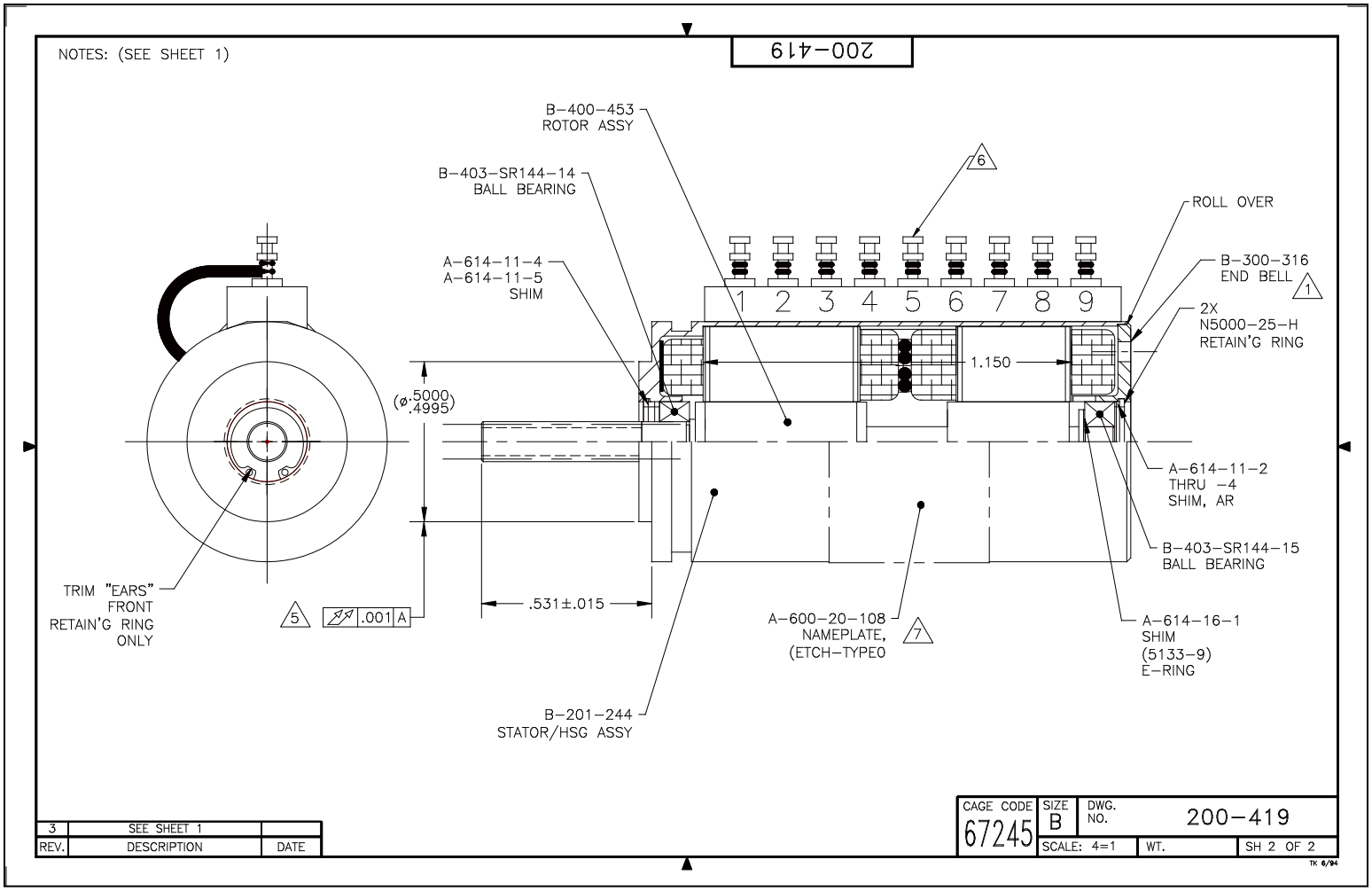

Right-Angle Drives

Spur and Planetary Gear Drives

Worm and Bevel Gear Systems

Ball Screw Systems

Lead Screws Systems

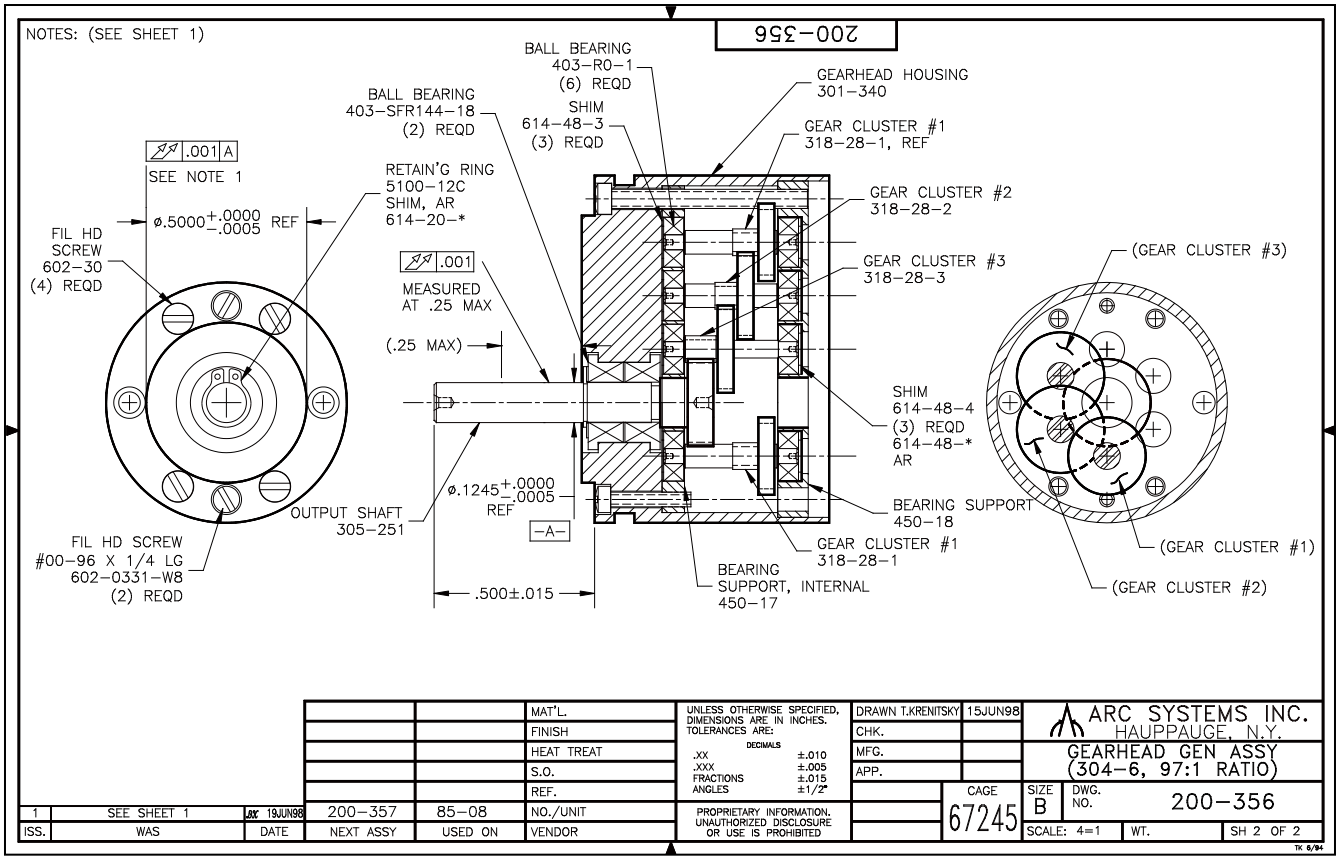

ARC's basic package includes the in-line arrangement of motors, tachometers, gear heads, and brakes. ARC also supplies complete electromechanical actuation systems, with or without electronic control.

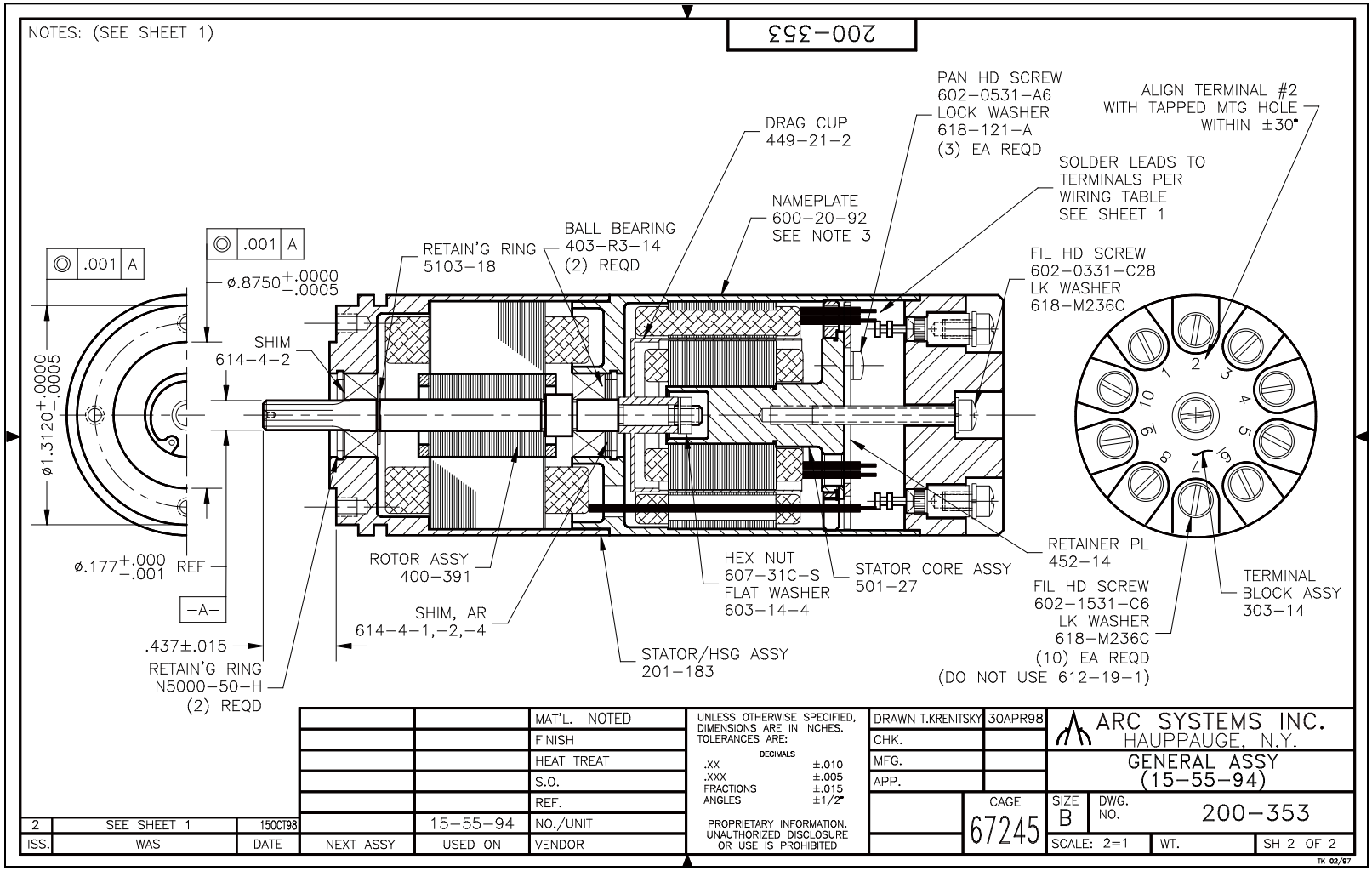

By selecting optional features, performance is tailored to the requirements of our customers.

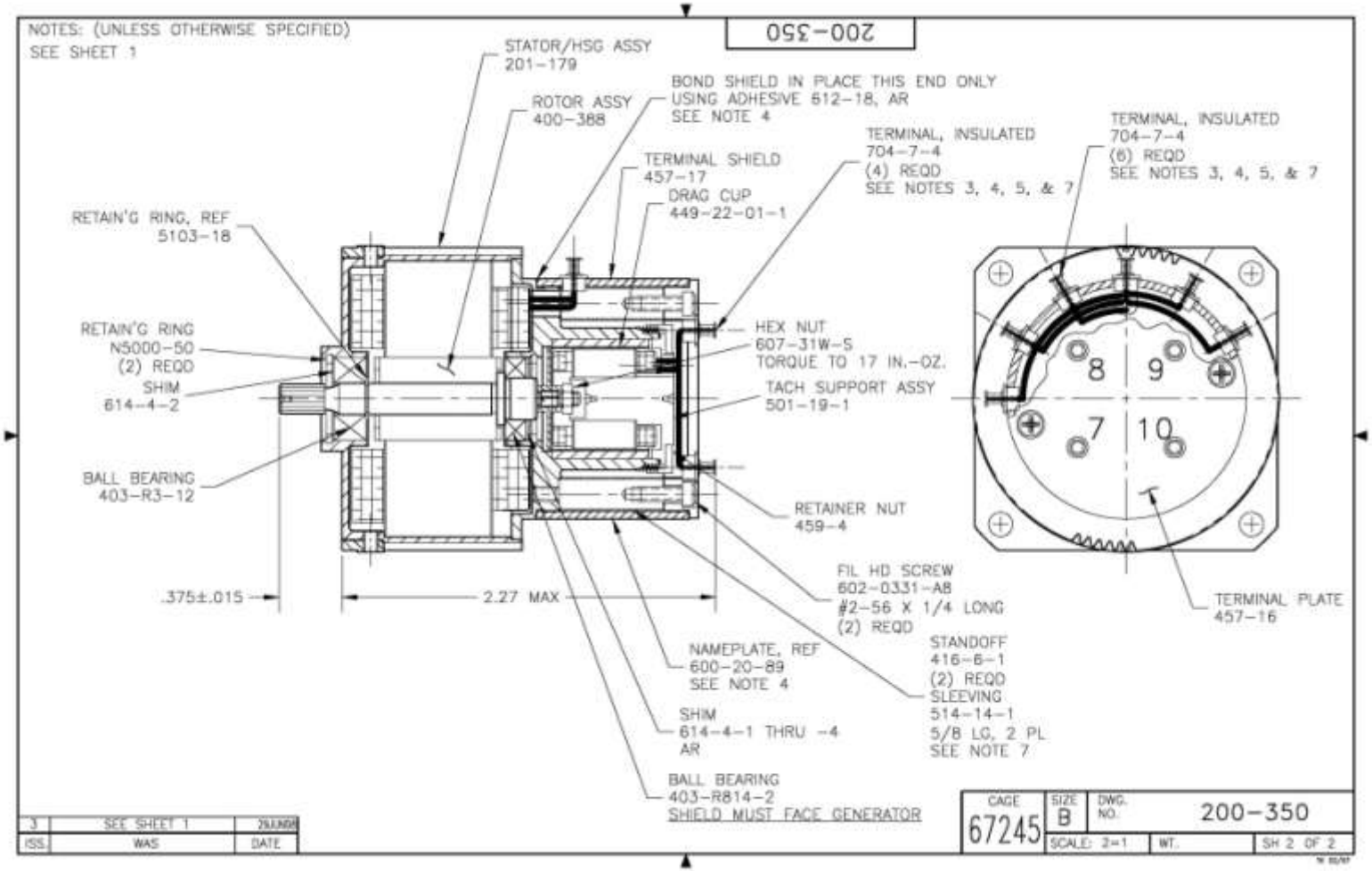

ARC Systems, Inc. provides the complete support you need in today's competitive environment, from initial engineering development through after market. Contact ARC to assist you in your electromechanical motion control evolution.

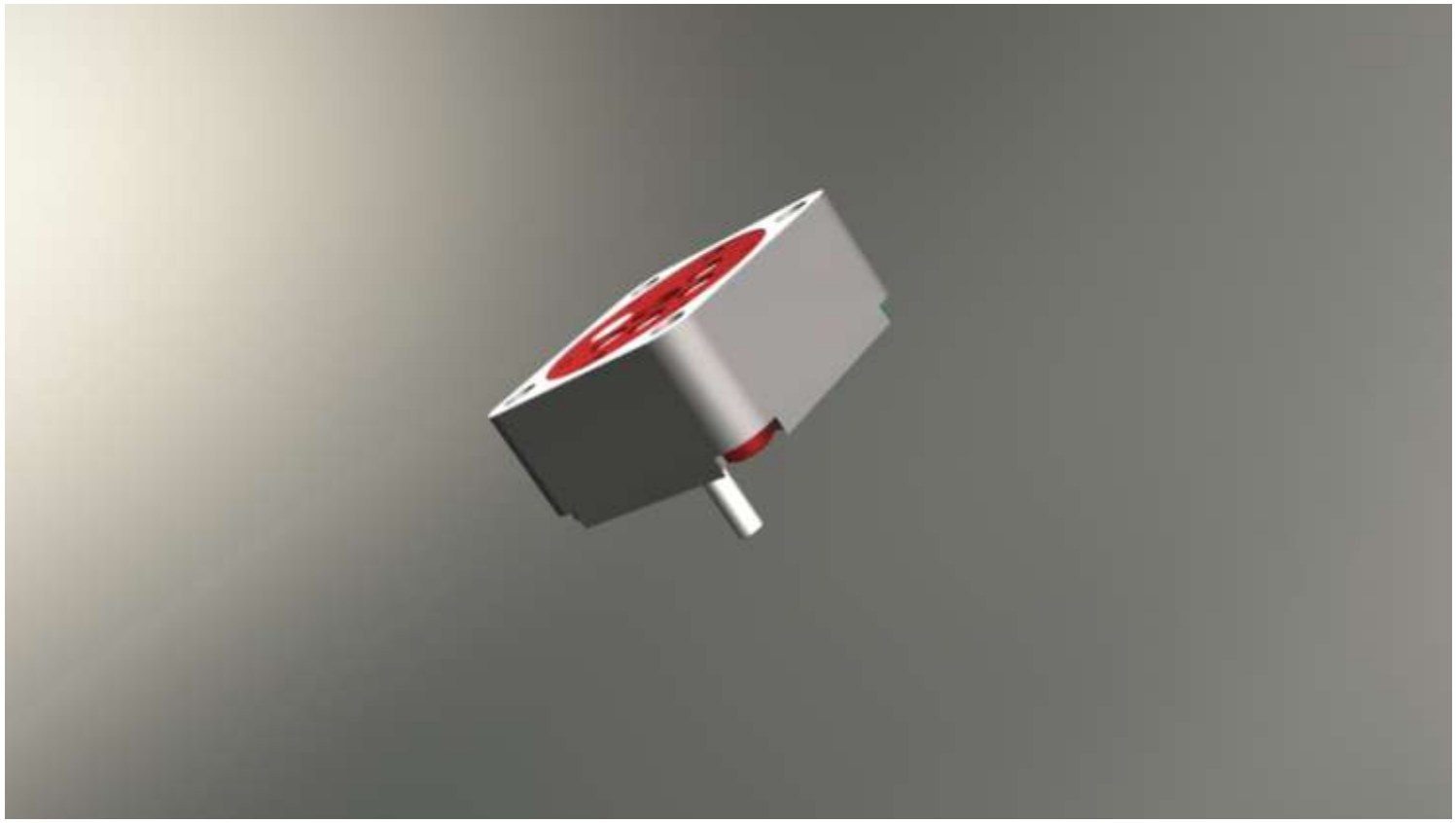

ARC Systems, Inc. complete line of AC Servo Motors are designed to meet the requirements of MIL-S-22432 and SAE ARP-497. These two phase AC Servo Motors range from sizes 8 to 23.

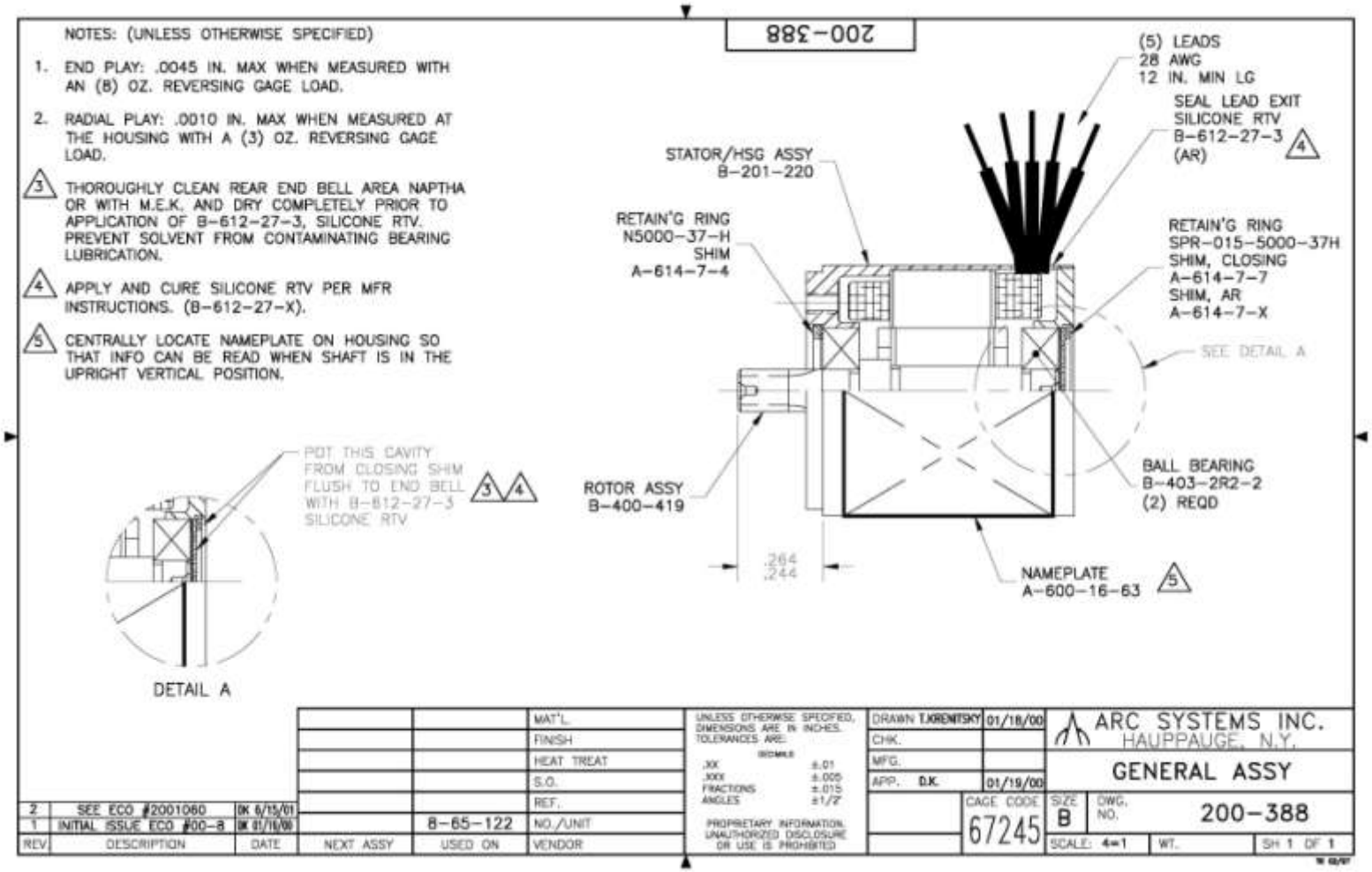

NOTES: (UNLESS OTHERWISE SPECIFIED)

1. BAG HOUSING ASSY, ROTOR ASSY, MAGNET ASSY AND ALL HARDWARE (SHIMS, RETAINING RINGS, FASTENERS AND OTHER ASSEMBLY ITEMS) AS SHOWN. KIT IS SUPPLIED WITHOUT BALL BEARINGS.
2. CAREFULLY BAG AND PACKAGE ITEMS SO THAT NO DAMAGE CAN OCCUR TO THE INDIVIDUAL PARTS.

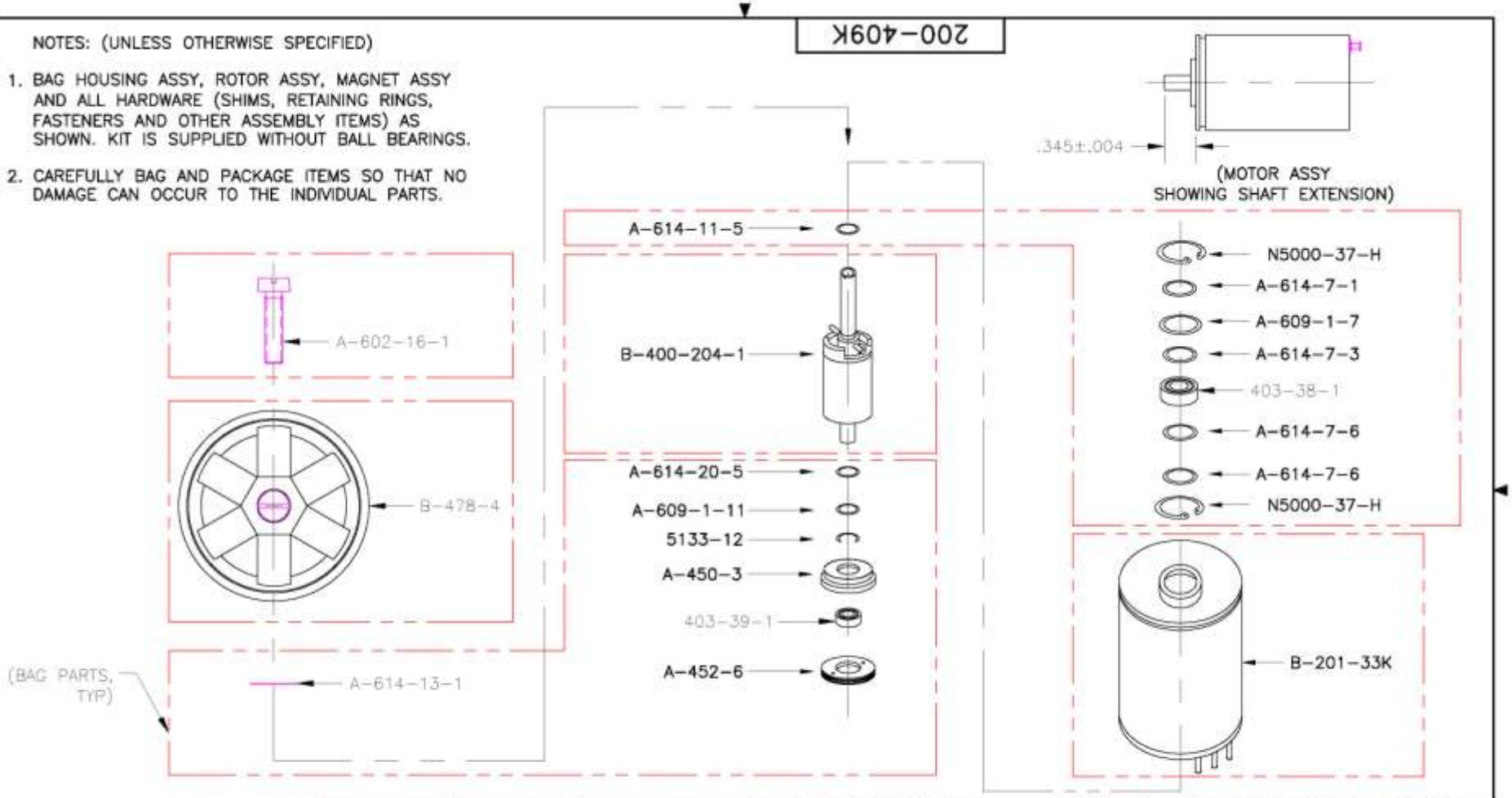

REV.	DESCRIPTION	DATE
3	ADD BEARING P/N'S	DK 1/22/09
2	SEE ECO# 2007036	DK 5/03/07
1	INITIAL ISSUE ECO #2001106	DK 9/28/01

NEXT ASSY	USED ON
–	46-01K

MAT'L.
FINISH
HEAT TREAT
S.O.
REF.
NO./UNIT
VENDOR

UNLESS OTHERWISE SPECIFIED, DIMENSIONS ARE IN INCHES. TOLERANCES ARE:

DECIMALS	
.XX	.010
.XXX	.005
FRACTIONS	±.015
ANGLES	±1/2°

PROPRIETARY INFORMATION, UNAUTHORIZED DISCLOSURE OR USE IS PROHIBITED

DRAWN	T.K.	9/26/01
CHK.		
MFG.		
APP.	D.K.	9/28/01

CAGE 67245

ARC SYSTEMS INC.
HAUPPAUGE, N.Y.

ASSEMBLY KIT

SIZE B | DWG. NO. 200-409K

SCALE: NONE | WT. | SH 1 OF 1

These miniature squirrel cage motors operate at 60 Hz. or 400 Hz. and are available in 2, 4, 6, 8, and 12 pole designs. Custom units that operate at other frequencies are available.

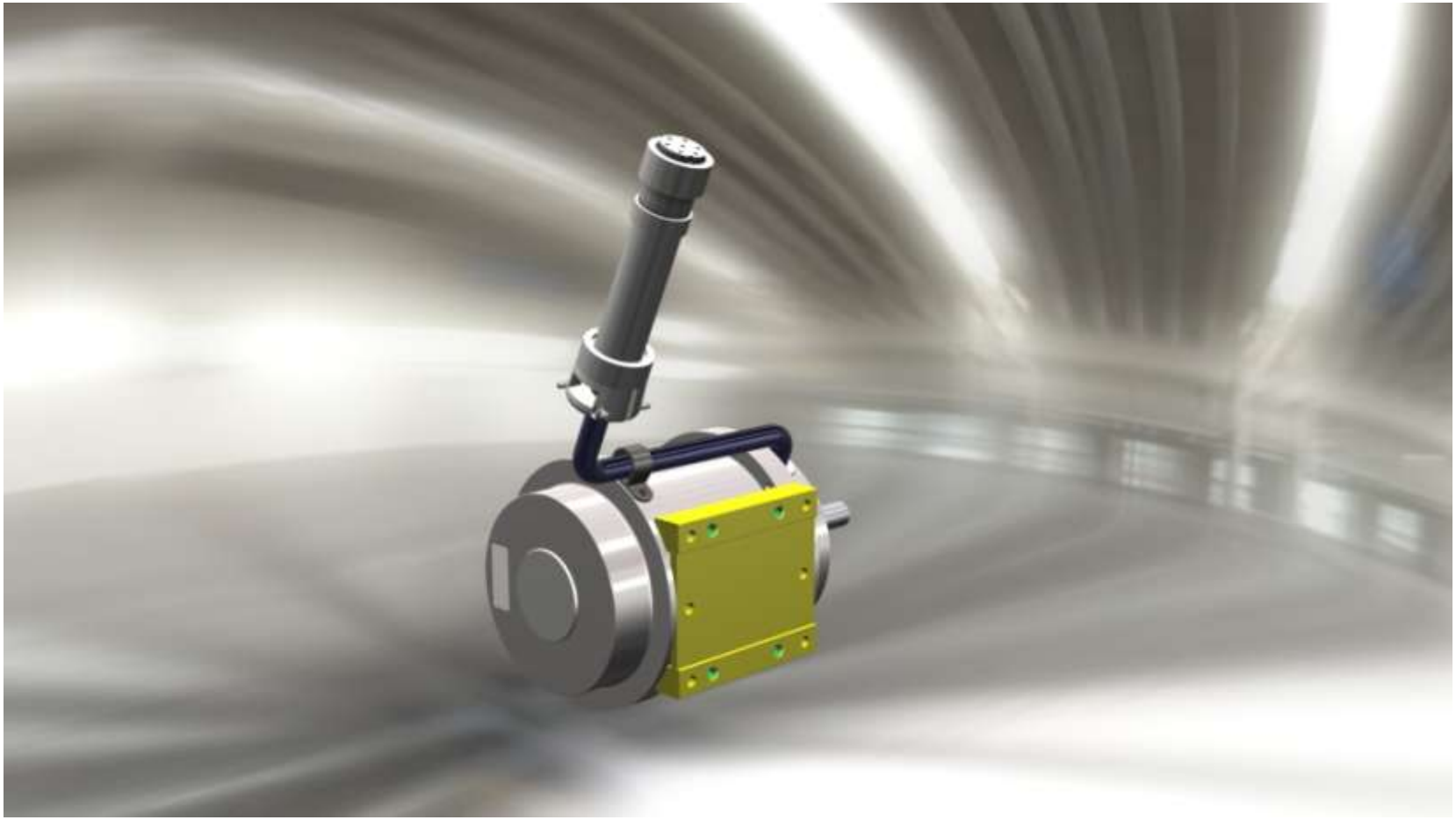

WHEN IT'S GOT TO BE RIGHT THE FIRST TIME….

CALL ARC SYSTEMS, INC.

ARC SYSTEMS INC.

We are ISO 9001:2008 certified, and our ISO 9001:2008 procedures apply to all aspects of our organization. These procedures ensure that complete control is retained.
We are committed to providing our customers with Reliable, High-Quality Products, and service. We would be happy to discuss your needs at your convenience.

on Quality

ISO-9001
CERTIFIED

AVAILABLE DESIGNS

- Induction Motors (Framed and Frameless)
- Single Phase Motors
- Three Phase Motors
- Servo Motors
- Brushless DC Motors
- Motor Gear Heads
- Winding Assemblies
- Kit Motors
- Fractional Horsepower Motors
- Hysteresis Synchronous Motors
- Actuators
- Motor Tachometer Generators
- Gears, Sprockets and Shafts
- Gear Assemblies and Timing Pulleys
- Brakes and Solenoids

For more information and application assistance contact D. Kirk in our Engineering Department at: dkirk@arcsystemsinc.com

ARC Systems, Inc.
ISO 9001:2008 Certified
2090 Joshuas Path ♦ Hauppauge, NY 11788 ♦ Tel: 631-582-8020 ♦ Fax: 631-582-8038
Website: www.arcsystemsinc.com